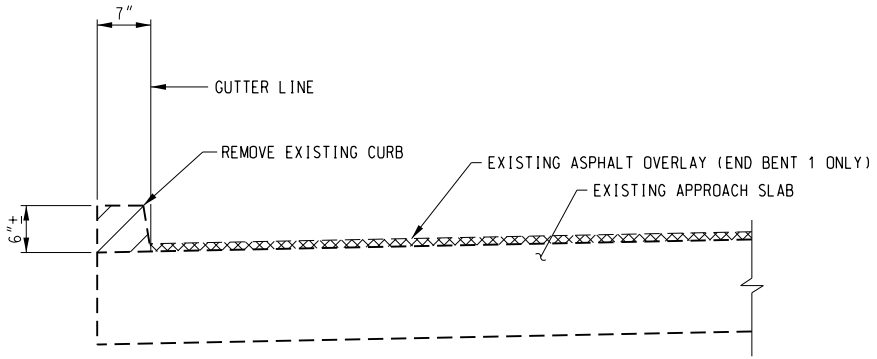

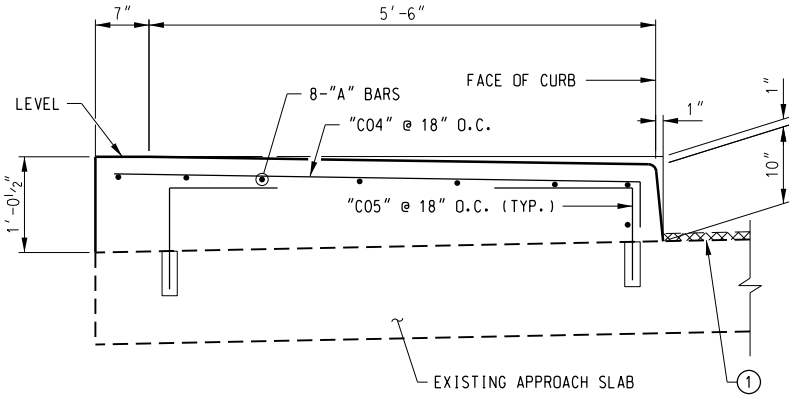

EXISTING

PROPOSED

(1) REMOVE EXISTING ASHPALT OVERLAY IN AREA OF SIDEWALK RETROFIT (END BENT 1 ONLY)

BARRIER RAIL - SIDEWALK RETROFIT

(APPROACH SLAB SECTION)

NOTES:

BARRIER RAIL AND SIDEWALK SHALL BE CLASS 4000 CONCRETE.

ROUGHEN THE EXISTING DECK SURFACE TO AN AMPLITUDE OF ¼" PRIOR TO CONSTRUCTING THE PROPOSED SIDEWALK.

INSTALL ADHESIVELY BONDED DOWELS IN ACCORDANCE WITH SCDOT STANDARD SPECFICIATIONS.

THE DECK UNDER THE EXISTING BARRIER IS NOT TO BE DAMAGED. ANY DAMAGE TO THE DECK OR EXISTING REINFORCEMENT EXTENDING OUT OF THE DECK IS TO BE REPAIRED BY THE CONTRACTOR AT NO COST TO SCDOT.

REMOVE ALL GREASE, DIRT, OIL, OR FOREIGN MATERIAL FROM THE PATCH AREAS BY BLAST CLEANING. IMMEDIATELY BEFORE PLACING PATCHING MATERIAL, REMOVE ALL DUST, SAND, AND BLASTING DEBRIS WITH OIL-FREE COMPRESSED AIR.

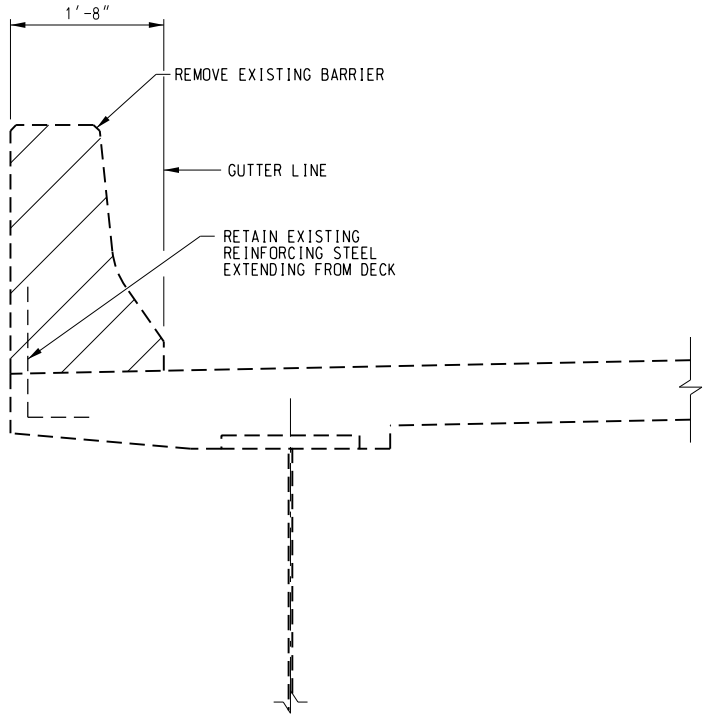

EXISTING

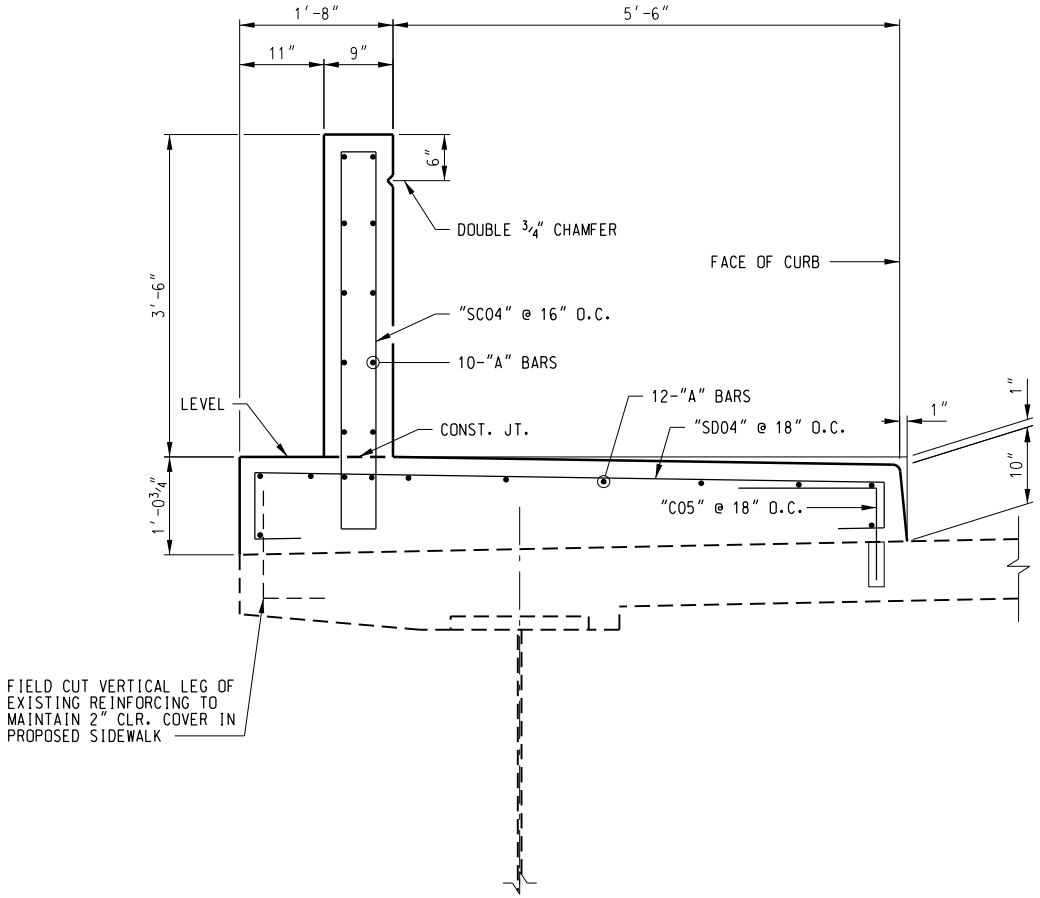

PROPOSED

BARRIER RAIL - SIDEWALK RETROFIT

(BRIDGE SECTION)

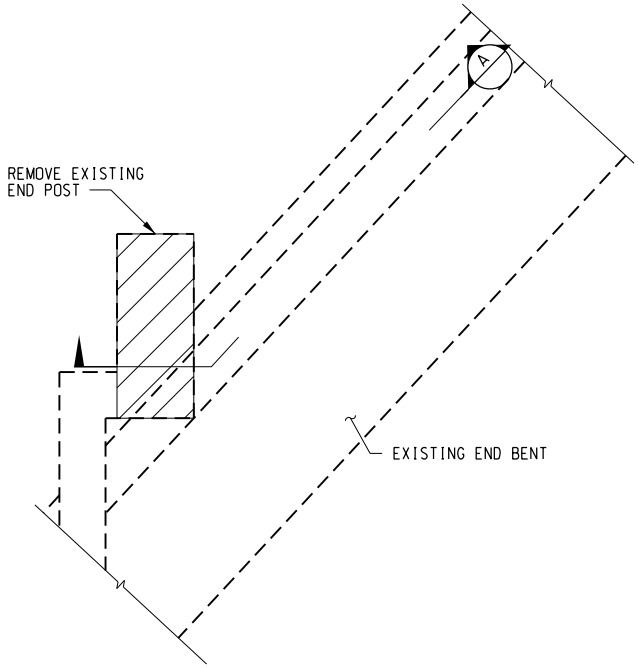

PLAN

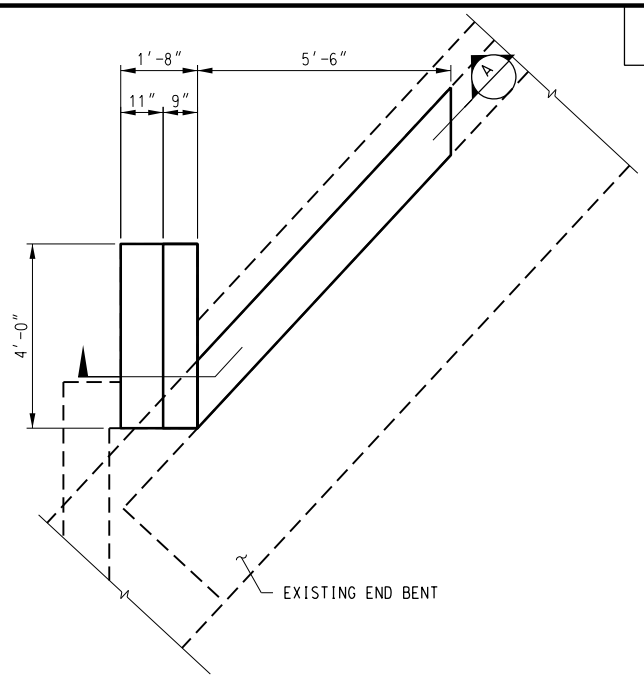

PLAN

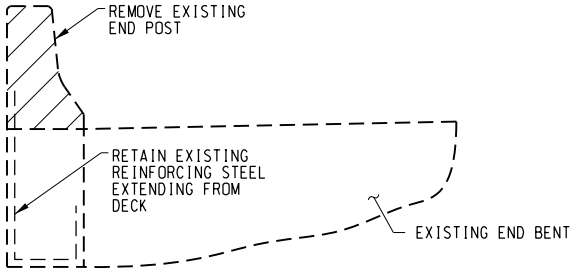

SECTION A-A

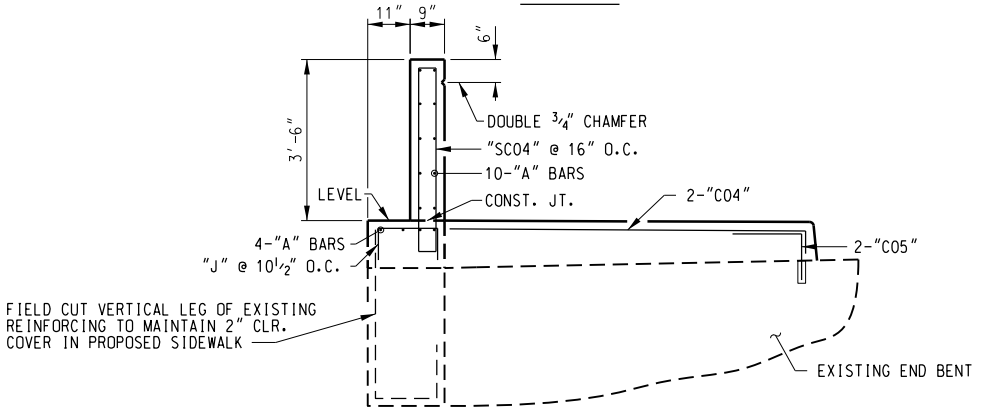

SECTION A-A

EXISTING

PROPOSED

BARRIER RAIL - SIDEWALK RETROFIT

(END BENT - END POST SECTION)

(FOR GUARDRAIL ATTACHMENT, SEE EXISTING PLANS)
(END BENT 5 SHOWN, END BENT 1 SIMILAR)